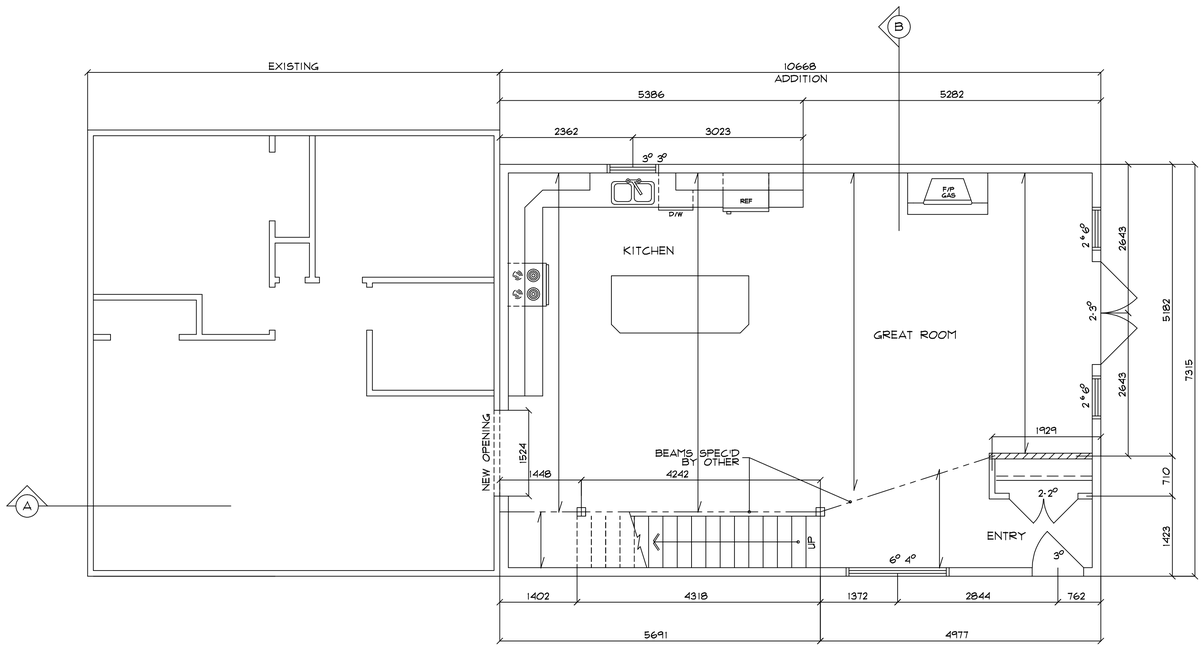

MAIN FLOOR PLAN
1:50
ADDITION 78.04 M2

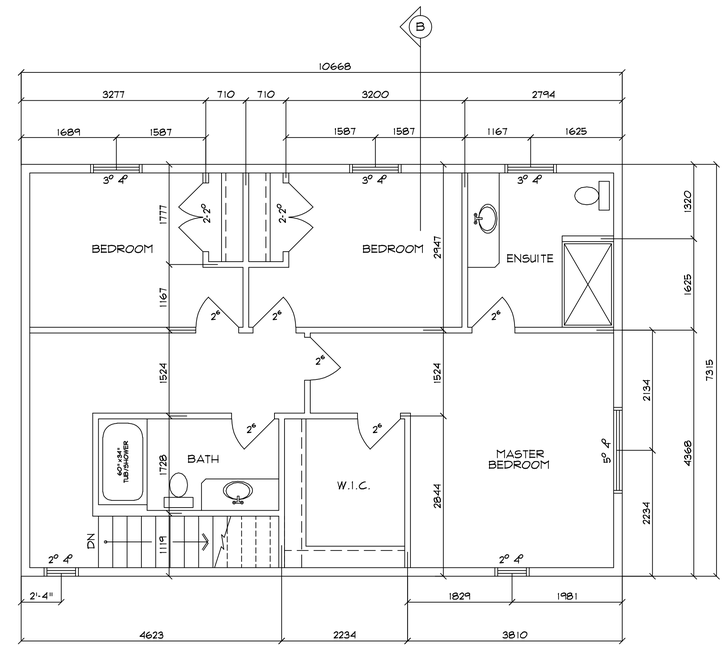

UPPER FLOOR PLAN
1:50
ADDITION 78.04 M2

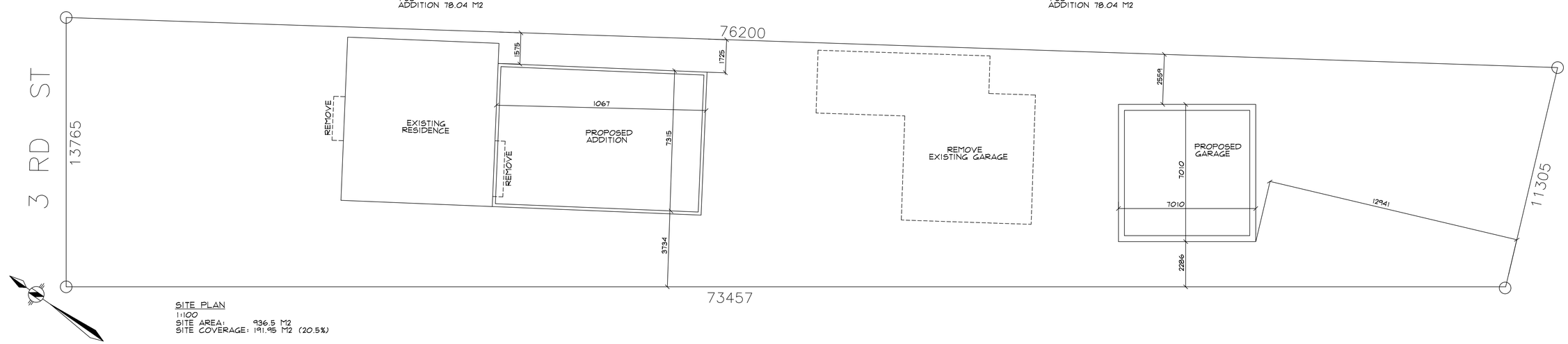

SITE PLAN
1:100
SITE AREA: 936.5 M2
SITE COVERAGE: 191.95 M2 (20.5%)

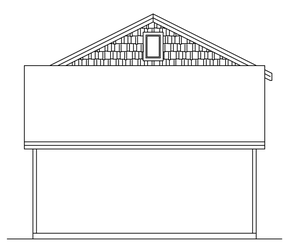

FRONT ELEVATION
1:100

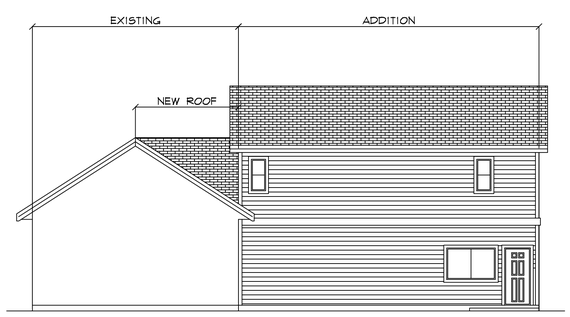

RIGHT ELEVATION
1:100

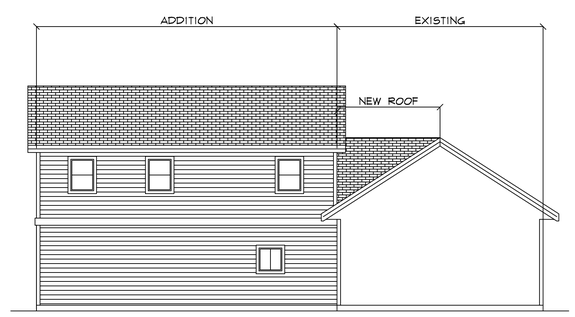

LEFT ELEVATION
1:100

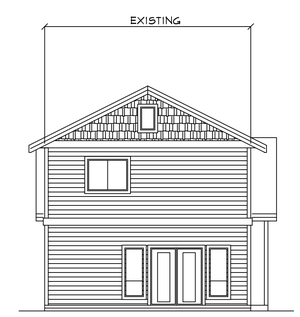

REAR ELEVATION
1:100

HS DESIGNS
811-2980 Kilpatrick Avenue Courtenay, B.C.
Phone:
(250)338-6822
E-mail:
hsdesigns.ted@gmail.com

JOHNSTON
ADDITION PLANS
877 3RD ST COURTENAY, BC

Date	Drawn	Scale	Dwg. No.
APRIL 2021	TDS	AS NOTED	1 OF 2

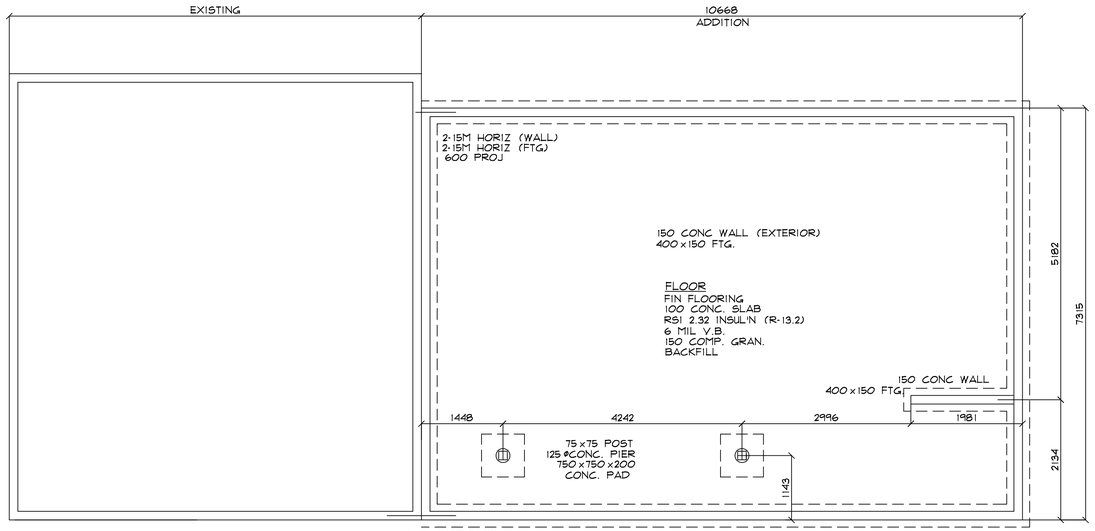

FOUNDATION PLAN
1:50

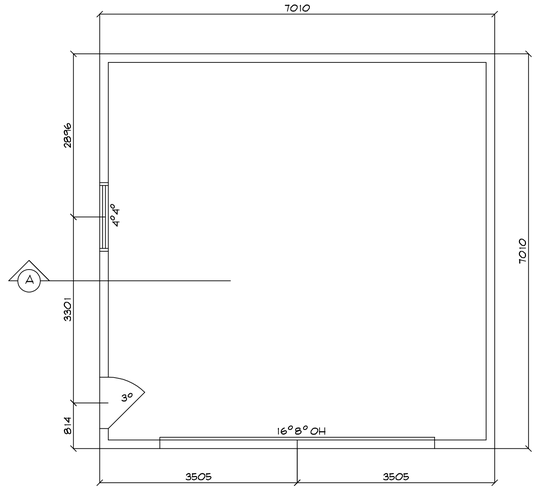

FLOOR PLAN
1:50
49.2 M2

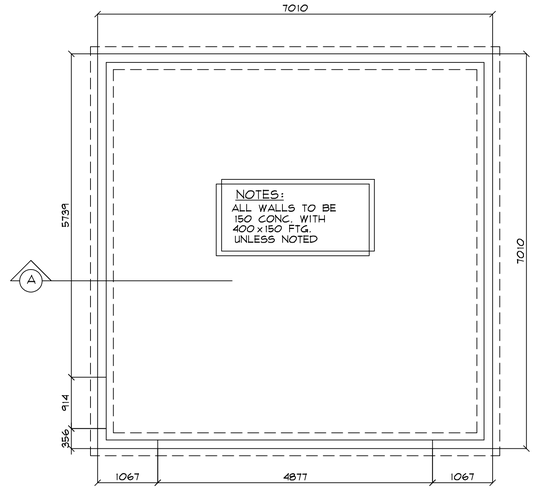

FOUNDATION PLAN
1:50

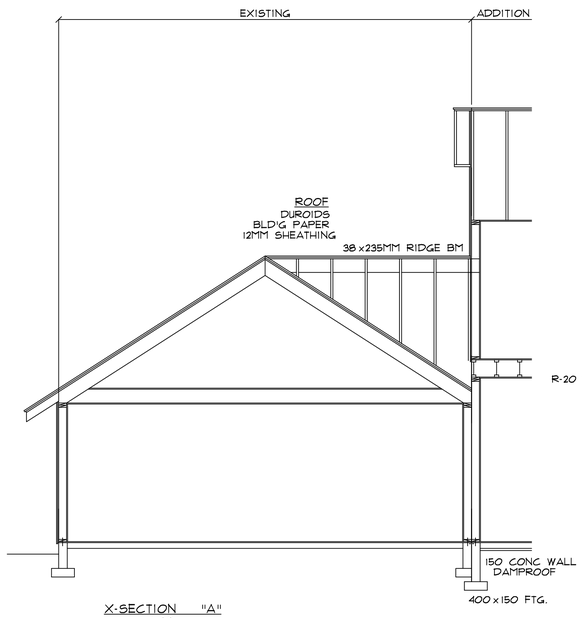

X-SECTION "A"
1:50

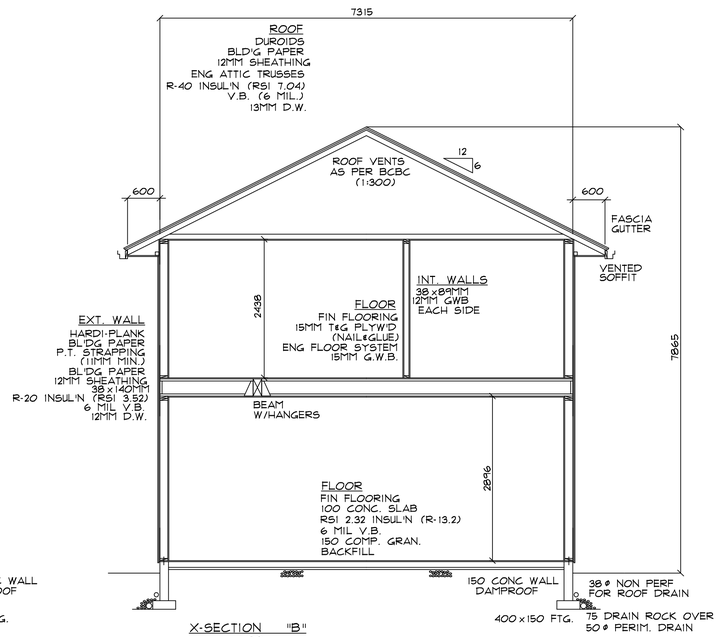

X-SECTION "B"
1:50

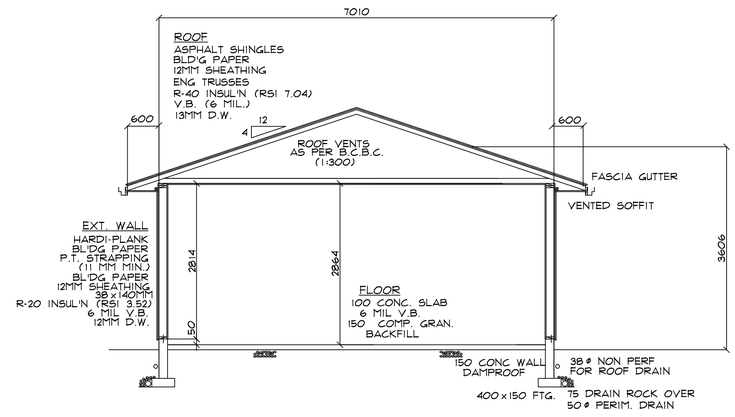

X-SECTION "A"
1:50

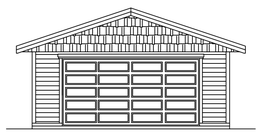

FRONT ELEVATION
1:100

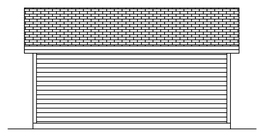

RIGHT ELEVATION
1:100

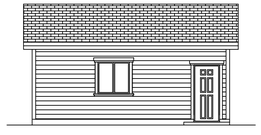

LEFT ELEVATION
1:100

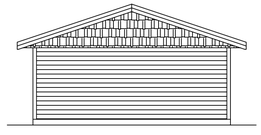

REAR ELEVATION
1:100

GENERAL NOTES

VERIFY ALL DIMENSIONS PRIOR TO CONSTRUCTION.
CONFIRM FOUNDATION PLAN DIEMNSIONS WITH FLOOR PLANS.
ALL CONSTRUCTION TO COMPLY TO THE CURRENT B.C.B.C .
CONTRACTOR SHALL EMPLOY THE BEST PRACTICES OF THE INDUSTRY.
REFER TO TRUSS LAYOUT FOR: GIRDERS, BEAMS, POINT LOADS ETC.
ALL BEAMS/HEADERS NOT SIZED SHALL BE SPEC'D BY A P. ENG.
CONCRETE STRENGTH TO BE 3000 P.S.I. @ 28 DAYS.
FLOOR JOISTS, LINTELS (2-2 x 10) & BUILT UP BEAMS TO BE HEM-FIR #2 OR BETTER.
FLASH & CAULK AS REQUIRED TO ENSURE A WEATHER TIGHT BUILDING.
ELECTRICAL,MECHANICAL AND PLUMBING TO BE SPEC'D BY OWNER.
OWNER/CONTRACTOR TO SPECIFY LOCATION OF CRAWL SPACE/ATTIC ACCESS.
SMOKE ALARMS AS PER CURRENT BCBC

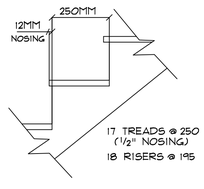

STAIR DETAIL
1/2" = 1'-0"

HS DESIGNS
811-3080 Kilpatrick Avenue Courtenay, B.C.
Phone:
(250)338-6822
E-mail:
hsdesigns.ted@gmail.com

JOHNSTON
ADDITION & SHOP PLANS
877 3RD ST COURTENAY, BC

Date	Drawn	Scale	Dwg. No.
APRIL 2021	TDS	AS NOTED	2 OF 2

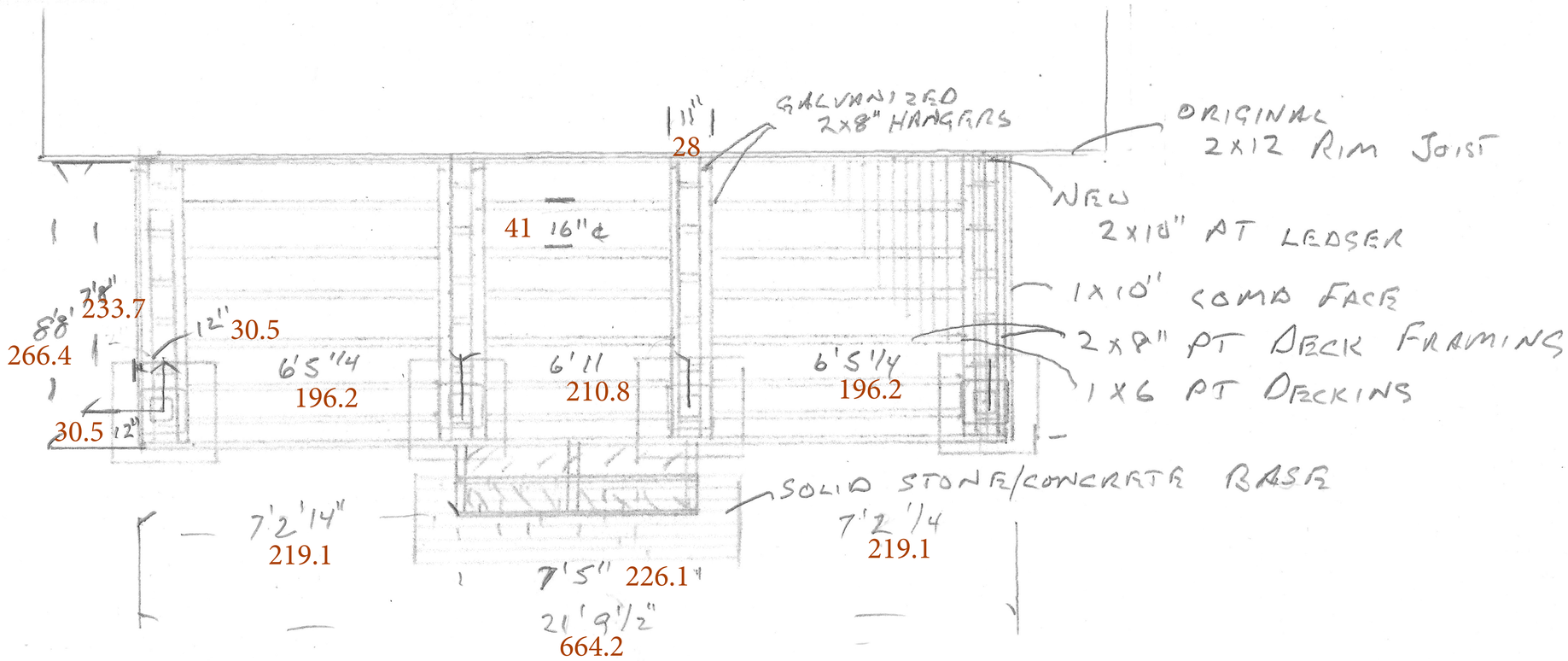

DECK FRAME N.T.S

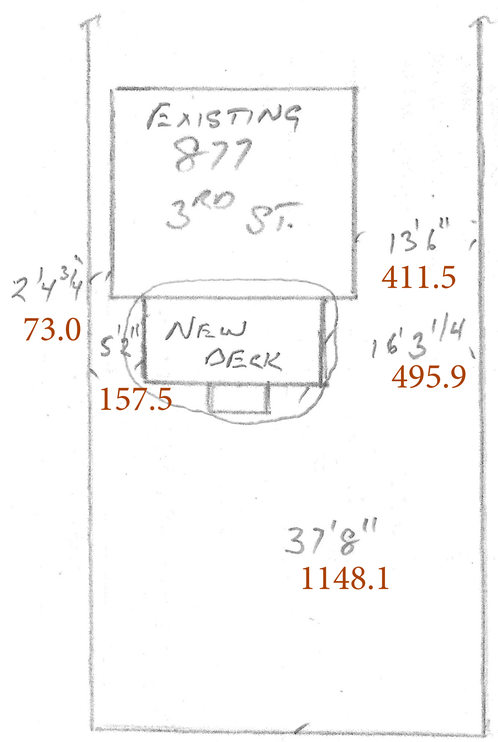

N

SITE PLAN N.T.S

187 □' DECK AND ROOF
17.37 sq m

Metric = red
Centimeters
Eg - 123.4

877 3RD ST
PAUL JOHNSTON
250 334 6469

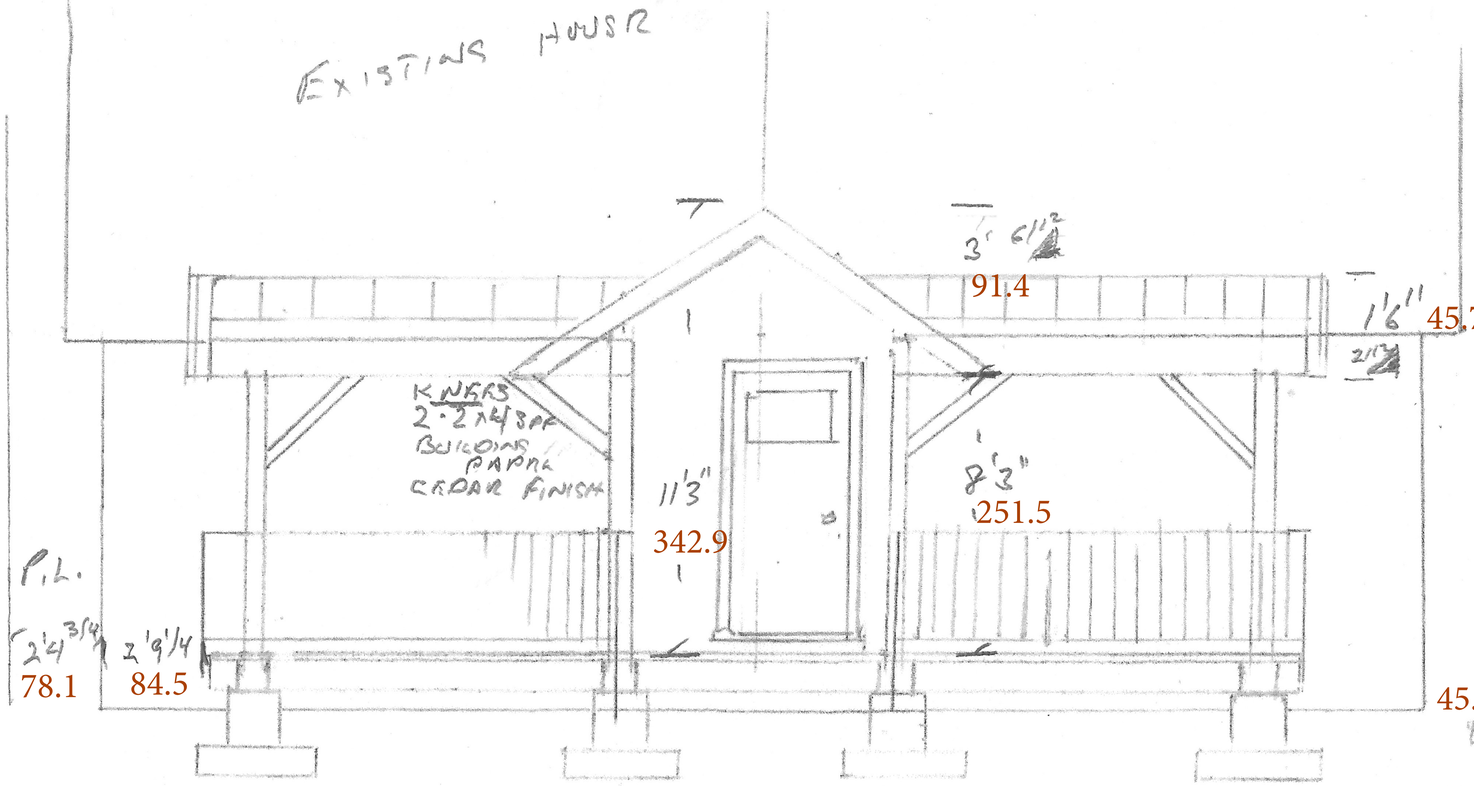

FRONT
NTS.

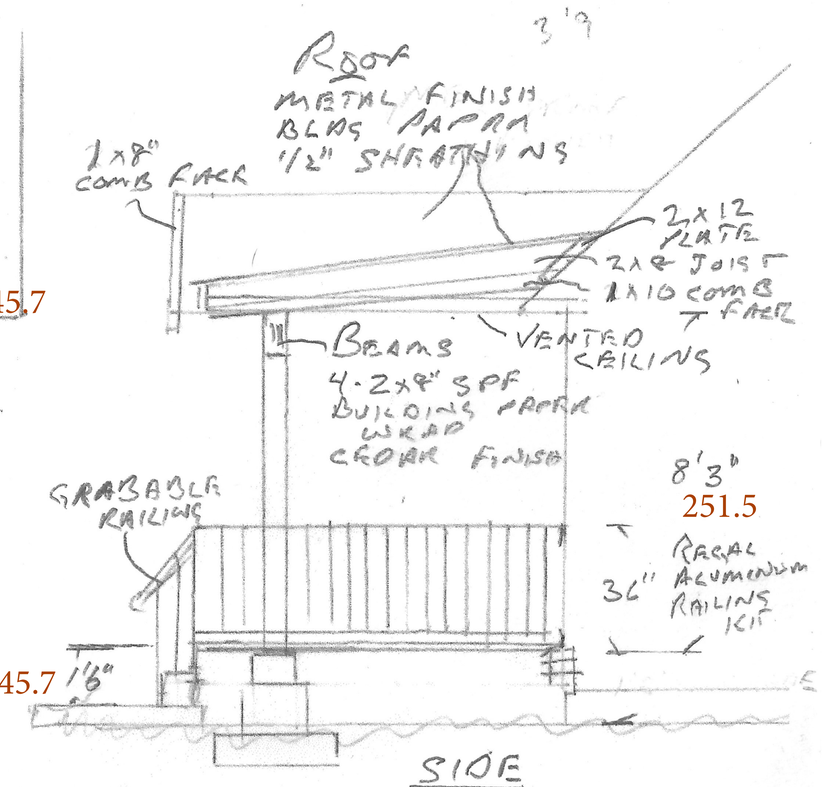

SIDE
NTS.

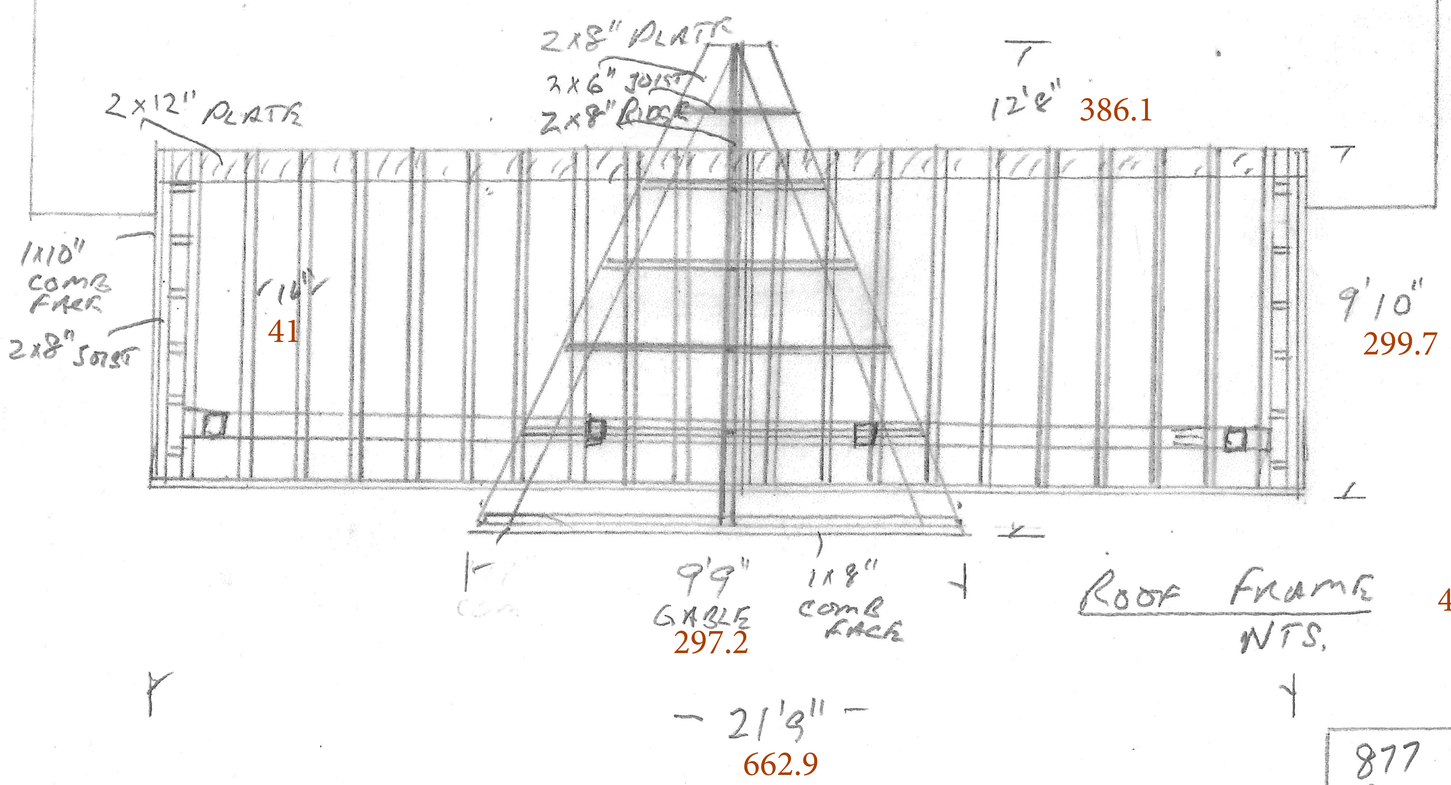

ROOF FRAME
NTS.

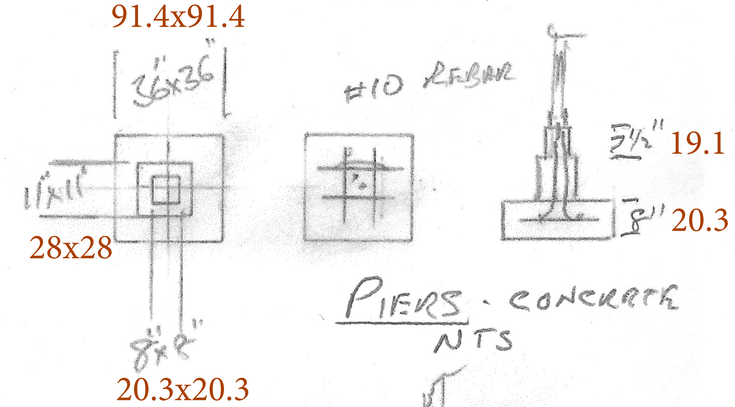

PIERS - CONCRETE
NTS

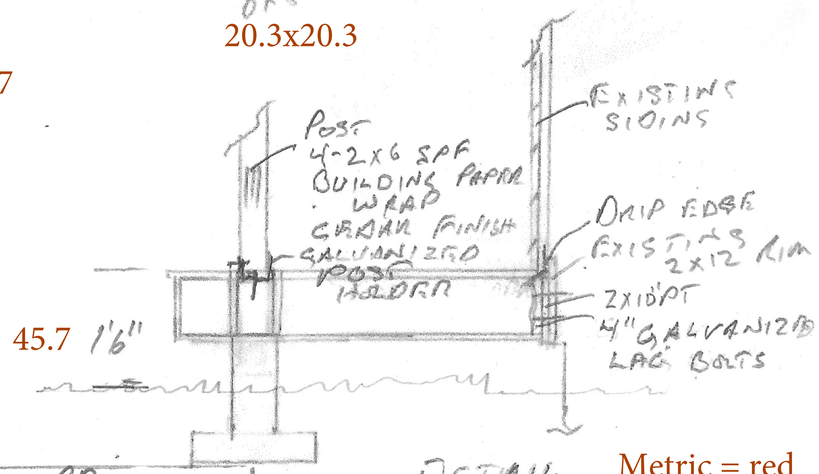

DETAIL
NTS.

877 3RD ST
PAUL JOHNSTON
250 334 6469

Metric = red
Centimeters
Eg - 123.4